RIB Functional Devices, Inc.™ (800) 888-5538 sales@functionaldevices.com www.functionaldevices.com

30 AMP POWER CONTROL RELAY

RIB24P30

Enclosed Relay 30 Amp DPDT with
24 Vac/dc Coil

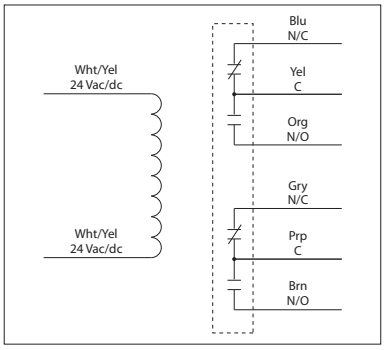

SPECIFICATIONS

 # Relays & Contact Type: One (1) DPDT Continuous Duty Coil
Expected Relay Life: 10 million cycles minimum mechanical
Operating Temperature: -30 to 140° F
Humidity Range: 5 to 95% (noncondensing)
Operate Time: 18ms
Relay Status: LED On = Activated
Dimensions: 2.30˝ x 3.20˝ x 1.80˝
with .75˝ NPT Nipple
Wires: 16˝, 600V Rated
Approvals: UL Listed, UL916, UL864, UL60947, C-UL
California State Fire Marshal, CE, RoHS
Housing Rating: UL Accepted for Use in Plenum, NEMA 1
Gold Flash: Yes
Override Switch: No

Contact Ratings:
30 Amp Resistive @ 300 Vac
25 Amp Resistive @ 28 Vdc
20 Amp Ballast @ 277-480 Vac
Not rated for Electronic Ballast
15 Amp Resistive @ 600 Vac
770 VA Pilot Duty @ 120 Vac
1158 VA Pilot Duty @ 240 Vac
1110 VA Pilot Duty @ 277 Vac
1640 VA Pilot Duty @ 480 Vac
Heavy Pilot Duty @ 600 Vac
3 HP @ 480-600 Vac
2 HP @ 240-277 Vac
1 HP @ 120 Vac

Coil Current:
110 mA @ 20 Vac
138 mA @ 24 Vac
55 mA @ 20 Vdc
55 mA @ 24 Vdc
77 mA @ 30 Vdc

Coil Voltage Input:
24 Vac/dc ; 50-60 Hz
Drop Out = 3 Vac / 3.8 Vdc
Pull In = 20 Vac / 20 Vdc

Functional Devices, Inc.
101 Commerce Drive
Sharpsville, IN 46068

Toll-free: (800) 888-5538
Office: (765) 883-5538
Fax: (765) 883-7505

Email: sales@functionaldevices.com
Website: www.functionaldevices.com

TERMS AND CONDITIONS OF SALE

1. OFFER, GOVERNING PROVISIONS AND CANCELLATIONS: This document constitutes an offer or counter-offer by Functional Devices, Inc. or any of its affiliates ("**Seller**") to sell various products as agreed by Seller ("**Products**") to the buyer named on the reverse side of this document or in other applicable print or electronic documentation ("**Buyer**") in accordance with these terms and conditions. This writing is not an acceptance of any offer made by Buyer. This offer or counter-offer is expressly conditioned upon Buyer's assent to these terms and conditions and no others. Buyer is deemed to have assented to these terms and conditions (including Seller's warranty) when the first of the following occurs: A. Buyer signs and delivers to Seller an acknowledgement copy of any of Seller's quotation, order acknowledgement or invoice forms; B. Buyer gives to Seller (orally or in writing) specifications of quantity and/or type, assortments thereof, delivery dates, shipping instructions, instructions to bill, or the like as to all or any part of the Products; C. Buyer receives delivery of any of the Products; or, D. Buyer has otherwise assented to the terms and conditions hereof.

Where an attachment to this Agreement or separate document referencing this Agreement consists of a quotation, the quotation remains open for acceptance for a period of thirty (30) days or such other period as specified in the quotation. Seller hereby rejects any additional or different terms or provisions contained in any purchase order, acknowledgment or other communication heretofore or hereafter received from Buyer. Seller's delivery of Products does not constitute an assent to any terms proposed by Buyer. Except for an officer of Seller, no representative of Seller has any authority to waive, alter, vary, amend, or add to the terms hereof. **THESE TERMS AND CONDITIONS OF SALE CONSTITUTE THE ENTIRE AGREEMENT ("AGREEMENT") BETWEEN SELLER AND BUYER WITH RESPECT TO THE MATTERS ADDRESSED HEREIN.**

2. PRICES: The prices for the Products are based on the terms and conditions herein, including the limitations of liability and warranties, and all such terms and conditions are material to the sale of the Products. In the event Seller fails to provide a price quote and/or terms prior to the acceptance of the order, Buyer will pay Seller's then-current list price for such Products. All quotations and invoices show the net selling price of each item quoted. In the event of a mathematical error, the quoted price per Product governs.

3. TERMS OF PAYMENT: Buyer will pay the fees specified in each invoice provided by Seller in United States Dollars within thirty (30) calendar days after the invoice date unless otherwise agreed to in writing by an authorized representative of Seller. Any amount due under this Agreement that remains unpaid after its due date will bear interest from the date that such payment became delinquent until the date it is paid in full at the lower of 1.5% per month, which equals an annual percentage rate of 18%, or the maximum rate permitted by law. Seller reserves the right to establish, revoke or modify credit terms for Buyer at any time. No discounts are allowed unless otherwise agreed to in writing by an authorized representative of Seller. Buyer will pay any collection fees, legal fees, or court costs incurred by Seller to collect past due amounts. No offsets or setoffs of payments due to Seller hereunder are allowed with respect to any other agreement between the parties. Seller hereby retains a lien on the goods sold for unpaid purchase money as herein provided.

4. TAXES AND OTHER CHARGES: In addition to the prices quoted or invoiced, Buyer will pay any sales tax, excise tax, use tax, value added or consumption tax, customs duty (that is assessed on the delivery of Product(s) to a destination outside of the U.S.A.), fee or charge of any nature whatsoever imposed by any governmental authority on or measured by the transaction between Seller and Buyer. In the event Seller is required to pay any amount, Buyer will reimburse Seller therefore; or provide Seller, at the time the order is submitted, an exemption certificate or other document acceptable to the authority imposing the same. Seller does not accept and will not pay any fines, penalties or chargebacks from Buyer for any reason.

5. DELIVERY, RISK OF LOSS, CLAIMS AND FORCE MAJEURE:

A. All prices quoted for products are Ex-Works (Incoterms 2010) at a shipping facility determined by Seller, unless otherwise noted by Seller ("**Seller's Shipping Facility**"). Risk of loss or damage, and beneficial ownership, of the Products are transferred to Buyer when the Products are made available to Buyer at Seller's Shipping Facility. All delivery dates are approximate.

B. Buyer will only make written claims to Seller for damages, shortages or other delivery errors within seven (7) calendar days after receipt of shipment. All Products received by Buyer, or Buyer's clients, customers, or agents, that are not rejected within such time will be deemed accepted. Failure to provide such written notice constitutes a waiver of all such claims regarding such shipment by Buyer. Buyer will not revoke acceptance.

C. Seller is not liable for any damage as a result of any delay or failure to deliver due to any act of God, act of Buyer, embargo or other governmental act, regulation or request, fire, accident, power outage, strike, civil unrest, weather, slowdown or other labor difficulties, war, riot, act of terrorism, delay in transportation, defaults of common carriers, inability to obtain necessary labor, materials or manufacturing facilities or, without limiting the foregoing, any other delays beyond Seller's control. Buyer's sole and exclusive remedy for any delays or for Seller's inability to deliver Products for any reason, in each case, that persists for more than ninety (90) days, is to cancel the order pursuant to Seller's Order Policies and Guidelines available upon request.

6. WARRANTY; DISCLAIMER. Products are warranted to be free from manufacturing defects under normal use and conditions for five (5) years (the "**Warranty Period**").

The warranty does not apply to: (a) Damage caused by accident, abuse, mishandling, or dropping; (b) Products which have been subjected to unauthorized repair, opened, or taken apart; (c) Products not used in accordance with directions; (d) Damages exceeding the cost of such Product; and (e) Damages caused by lightning, water, or condensation. If warranty service is required during the Warranty Period, and if examination shall disclose to Seller's satisfaction that such Product was originally defective, then Seller will at its option repair or replace the product without charge upon prepaid delivery of such Product to Seller's facility with proof of date of purchase. Corrections of such defects by repair to or supplying of replacements for defective parts shall constitute fulfillment of all obligations of Seller.

Seller shall not be liable for loss, damage, or expense directly or indirectly caused from the failure of Products to perform as expected.

EXCEPT AS SET FORTH HEREIN, SELLER DISCLAIMS ALL REPRESENTATIONS OR WARRANTIES OF ANY KIND WHATSOEVER, WHETHER EXPRESS, IMPLIED OR STATUTORY, INCLUDING, WITHOUT LIMITATION, ANY IMPLIED WARRANTIES OF MERCHANTABILITY, NON-INFRINGEMENT, FITNESS FOR A PARTICULAR PURPOSE OR ANY WARRANTY ARISING FROM A COURSE OF DEALING OR USAGE OF TRADE. NO PERSON (INCLUDING ANY AGENT, DEALER OR REPRESENTATIVE OF SELLER) IS AUTHORIZED TO MAKE ANY REPRESENTATION OR WARRANTY CONCERNING PRODUCTS EXCEPT TO REFER BUYER TO THIS AGREEMENT. BUYER WARRANTS THAT BUYER HAS NOT RELIED ON ANY OTHER WARRANTIES OR REPRESENTATIONS CONCERNING THE PRODUCTS OR THIS AGREEMENT.
For warranty service, call factory for RA number and send such Product prepared with sales receipt to:
FUNCTIONAL DEVICES, INC., 101 COMMERCE DRIVE, SHARPSVILLE, IN 46068.

7. LIMITATION OF LIABILITY: SELLER WILL NOT BE LIABLE FOR ANY LOSS OF PROFIT, INTERRUPTION OF BUSINESS OR ANY OTHER SPECIAL, CONSEQUENTIAL OR INCIDENTAL DAMAGES SUFFERED OR SUSTAINED BY BUYER FOR ANY REASON. EXCEPT FOR CLAIMS OF DEATH OR PERSONAL INJURY, IN NO EVENT WILL SELLER'S AGGREGATE LIABILITY TO BUYER ARISING UNDER OR IN ANY WAY RELATED TO THIS AGREEMENT FOR ANY REASON (INCLUDING, BUT NOT LIMITED TO, LIABILITY ARISING FROM NEGLIGENCE OR ON THE BASIS OF STRICT LIABILITY, OR OTHERWISE) EXCEED THE TOTAL AMOUNT PAID BY BUYER TO SELLER HEREUNDER FOR ANY PRODUCT GIVING RISE TO A CLAIM UNDER THIS AGREEMENT.

8. RETURNS: Unless otherwise approved by Seller in writing in its sole discretion, except in the case of a non-conforming shipment or a warranty issue, Buyer may not return Products. If Seller approves the return of Products pursuant to the preceding sentence, such returned Products must be returned within ninety (90) days from date of invoice and will be subject to a 25% restocking fee. In the event of a non-conforming shipment or a warranty issue, Buyer may return Products, but only if Buyer first: (a) provides notice to Seller as required in this Agreement, (b) obtains prior authorization from Seller, and (c) all Products or containers for which return is properly authorized have been marked with a return authorization number supplied by Seller. Buyer will make all returns via a traceable form such as Federal Express, UPS or insured mail and in resalable condition. Buyer will pay all return shipping charges and any other charges associated therewith.

9. CANCELLATIONS: Cancellation or deferment of all or part of an order is subject to acceptance by the Seller. If accepted, any reduction in quantity of any item to less than 85% of the original item quantity is subject to a 15% cancellation charge. If an order cancellation is accepted, the Buyer will make delivery and pay for all material manufactured and in stock or in process at time of notice for such order, and for any special materials on orders for which the Seller must take delivery.

10. EXPORTS. Buyer agrees that it will comply with any and all U.S. Export Controls and will not pay for, resell, transfer or knowingly sell Products in violation of U.S. Export Controls. If Buyer resells Products within or exports Products to a country or region which imposes upon Seller and/or Buyer an obligation to fund or undertake reuse, recycling, composting, recovery of Products, or any similar obligation (e.g., the European Union's Waste Electrical and Electronic Equipment Directive, EC 2002/96/EC) (the "**Obligations**"), Buyer shall wholly undertake the Obligations or duties and shall be entirely responsible for all associated costs therewith. Seller shall have no obligation to reimburse Buyer for execution of the Obligations. In the event that Seller is named in a proceeding based upon the Obligations, Buyer shall indemnify, defend and hold Seller harmless from all actions related thereto, including all civil and governmental actions.

11. MISCELLANEOUS. This Agreement is governed by the laws of the State of Indiana, without giving effect to its conflict of laws principles. Buyer hereby irrevocably consents and submits to the exclusive jurisdiction and venue of the state and federal courts in Marion County, Indiana. The United Nations Convention for Contracts for the International Sale of Goods is explicitly excluded. Each provision contained in this Agreement constitutes a separate and distinct provision severable from all other provisions. If any provision (or any part thereof) is unenforceable under or prohibited by any present or future law, then such provision (or part thereof) will be amended, and is hereby amended, so as to be in compliance with such law, while preserving to the maximum extent possible the intent of the original provision. Any provision (or part thereof) that cannot be so amended will be severed from this Agreement; and, all the remaining provisions of this Agreement will remain unimpaired. No modification, addition or deletion, or waiver of any rights under this Agreement is binding on a party unless made in a non-preprinted agreement clearly understood by the parties to be a modification or waiver, and signed by a duly authorized representative of each party.