Dwyer

SERIES CDTR

CARBON DIOXIDE/RH/TEMPERATURE TRANSMITTERS

NDIR CO_2 Sensor, Universal CO_2/RH Outputs, Optional Relay

European style

North American style

Duct

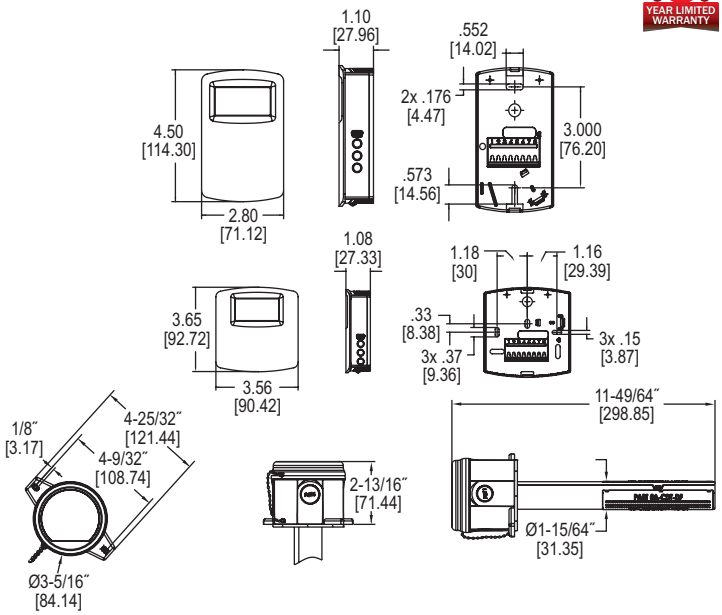

The **Series CDTR Carbon Dioxide, Relative Humidity and Temperature Transmitters** reduce the number of sensors mounted on a wall or in a duct. By combining CO_2, RH, and temperature in one device, system integrators are able to reduce installation time while lowering material cost at the same time.

Like our popular Series CDT Carbon Dioxide Transmitter, a single beam dual wavelength non-dispersive infrared (NDIR) sensor is used to automatically correct the measurement in both occupied* and unoccupied buildings against light source aging effects. In order to achieve the best possible accuracy, the Series CDTR also includes digital barometric pressure adjustment and the ability to field calibrate the sensor.

Universal outputs for both carbon dioxide and relative humidity allow users to select the transmitter output to be 4-20 mA, 0-5 VDC, or 0-10 VDC to work with virtually any building management controller. Additionally, passive thermistor or RTD sensor can be ordered for a temperature output.

For applications that require visual indication, the wall mount configurations of the Series CDTR can be ordered with an integral LCD display. The display can be configured to display temperature only, relative humidity only, CO_2 only, CO_2 and humidity, or CO_2 and temperature. Push-buttons are standard on all configurations of the transmitters for access to the menu structure. To prevent tampering, the action of the buttons can be locked out using an internal jumper selection.

FEATURES/BENEFITS

- Digital Intelligence Temperature Compensation Algorithm (DITCA™) eliminates error due to the self heating effects of wall mount combination devices.
- Single beam dual wavelength NDIR CO_2 sensor
- Replaceable humidity/temperature sensors
- Physical hardware lockout
- Service display tool available for duct mount and wall mount units without an LCD
- Relay output option

APPLICATIONS

- Demand control ventilation in schools, office buildings, hospitals, and other indoor environments
- LEED® certification

*For buildings occupied 24 hours per day, it is recommended that calibration be verified every 6 to 12 months depending on application.

SPECIFICATIONS

Range: CO_2: 0 to 2000 or 0 to 5000 PPM (depending on model); Relative humidity: 0 to 100%; Temperature: 32 to 122°F (0 to 50°C).
Accuracy: ±40 PPM + 3% of reading (CO_2); ±2% (RH).
Temperature Dependence: ±8 PPM / °C at 1100 PPM.
Non-Linearity: 16 PPM.
Pressure Dependence: 0.13% of reading per mm of Hg.
Response Time: 2 minutes for 99% step change.
Temperature Limits: 32 to 122°F (0 to 50°C).
Duct Air Velocity Range: 0-4000 FPM (20.32 m/s)
Humidity Limits: 10 to 95% RH (non-condensing).
Power Requirements: 16-35 VDC / 19-28 VAC.
Power Consumption: Average: 2 watts; Peak: 3.75 watts.
Sensor: Single beam, dual wavelength NDIR.
Output: Current: 4-20 mA (max 500 Ω); Voltage: 0-5 VDC or 0-10 VDC (min 500 Ω); Relay: SPST NO 2 A @ 30 VDC; RTD or thermistor per r-t curves (depending on model).
Weight: 5.6 oz (158.8 g).
Enclosure Rating: Duct mount: NEMA 4X (IP66) for housing only; Wall mount: IP20.
Agency Approvals: CE.

MODEL CHART

Example	CDTR	-2	N	4	A	4	-LCD	CDTR-2N4A4-LCD
Series	CDTR							Carbon dioxide/RH/ temperature transmitter
Range		2 5						0 to 2000 PPM CO_2 range 0 to 5000 PPM CO_2 range
Configuration			N E D					North American style wall mount European style wall mount Duct mount
CO_2 Output				4				4-20 mA / 0 to (5 or 10) VDC
Temperature Output					0 A B C D E F			None 10K Ω NTC thermistor type III 10K Ω NTC thermistor type II 3K Ω NTC thermistor Pt100 Ω RTD Pt1000 Ω RTD 20K Ω NTC thermistor
RH Output						4		4-20 mA / 0 to (5 or 10) VDC
Options							FC LCD RLY NBC	Factory calibration certificate LCD display (wall only) Relay No buttons (wall only)

ACCESSORIES

Model	Description
GCK-200CO-2000CO2	Calibration gas kit includes a 99.99% nitrogen gas cylinder for calibrating the zero point and a 200 PPM CO / 2000 PPM CO_2 gas cylinder for calibrating the span point on Dwyer's gas sensing transmitters
A-449	Remote LCD display allows remote indication of select Dwyer® wall mount transmitters for validation or certification purposes
A-449A	Remote LCD display with buttons allows remote indication and calibration of select Dwyer® wall mount transmitters for validation and certification purposes
A-CDT-KIT	Accessory kit including terminal block and power supply

GCK-200CO-2000CO2

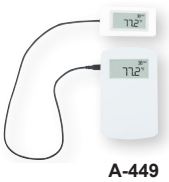

A-449

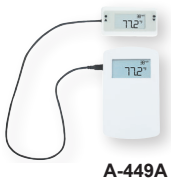

A-449A

LEED® is a registered trademark of the U.S. Green Building Council.